# Multi-Jet Dry Meter Measuring Capsules MODULARIS

## MTK-OZX, MTW-OZX

Fig. Dial MTK-OZX IST

Our wide Wehrle multi-jet dry meter measuring capsule portfolio covers all standard in-wall housings. They can be integrated into AMR systems via additional reading modules without a problem.

- Ready for integration into any AMR system
- Temperature range up to 50 °C (cold) and up to 90 °C (warm)
- Nominal flow $Q_3$ 2,5
- Suitable for all standard in-wall housings
- MID measurement accuracy class ($Q_3/Q_1$) up to R80 horizontal and up to R40 vertical
- 360° rotatable 8-digit totalizer
- Maximum pressure load 1,6 MPa
- Existing original rosettes can be used
  (Exception: Minol MB2-, MB3- and TE1-rosettes)
- Accessories (e.g. rosettes) are available separately
- Protection class IP64

# Multi-Jet Dry Meter Measuring Capsules MODULARIS

## MTK-OZX, MTW-OZX

### REMOTE READING OPTIONS AMR – (Automatic Meter Reading)

**MODULARIS-Module**
Modularis Pulse Generator, S0, DIN 43864
alternatively with
- 1 Litre per pulse
- 10 Litres per pulse
- 100 Litres per pulse

Modularis M-Bus module
according to EN 1434-3

Modularis Radio module, frequency range
433 MHz or 868 MHz (OMS)

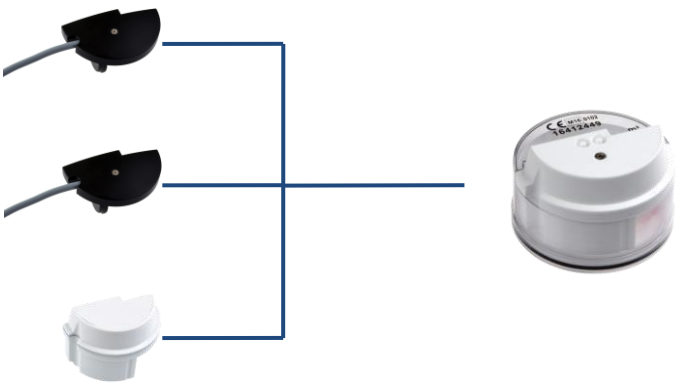

**Retrofitting with Modularis Radio module**

- Uni- or bidirectional transmission procedure
- Individually parameterizable
- Data recording via walk-by / drive-by
- Consumption data permanently stored
- Battery lifetime of up to 12 years
- Detection of rotation direction
- Manipulation detection

**Maximum convenience through AMR walk-by / drive-by solution**

- Recording and storage of consumption data inside the radio module
- Reading of stored data via mobile reading device

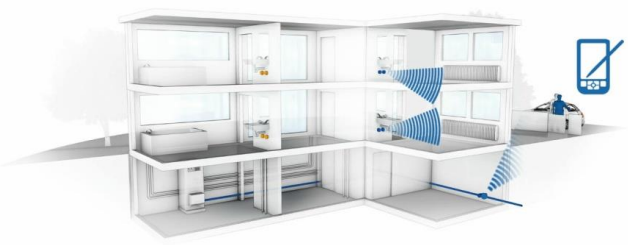



E. Wehrle GmbH | Obertalstraße 8 | 78120 Furtwangen | Germany | info@wehrle.de | www.wehrle.de

# Multi-Jet Dry Meter Measuring Capsules MODULARIS

## MTK-OZX, MTW-OZX

## TECHNICAL DATA

Example: Model IST

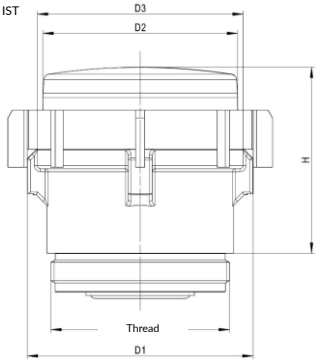


### Model

MTK-OZX = Cold water from +0,1 °C up to +50 °C
MTW-OZX = Warm water from +0,1 °C up to +90 °C

| Compatible to | Type* | Height **H** in mm (ca.) | D1 in mm | D2 in mm | D3 in mm | Nominal flow **Q3** in m3/h | Thread | Starting flow** in l/h | Flow rate Q' at 1 bar pressure loss in l/h (ca.) | Weight in kg (ca.) |
|---|---|---|---|---|---|---|---|---|---|---|
| Allmess UP6000 | A34 | 60 | 75 | 65 | 71 | **2,5** | M77x1,5 | 10 | 3700 | 0,5 |
| Deltamess TRK | DM1 | 55 | 75 | 65 | 71 | **2,5** | M60x2 | 10 | 3300 | 0,4 |
| Metrona 307/1 | HT2 | 51 | 75 | 65 | 71 | **2,5** | M66x1 | 10 | 3300 | 0,4 |
| ISTA EAS-N | IST | 62 | 75 | 65 | 71 | **2,5** | G 2" | 10 | 3300 | 0,4 |
| Minol MB2 | MB2 | 44 | - | 65 | 71 | **2,5** | 73,8mm | 10 | 2800 | 0,5 |
| Minol MB3 | MB3 | 60 | 75 | 65 | 71 | **2,5** | M76x1,5 | 10 | 3500 | 0,5 |
| Metrona/Brunata HT3 | MET | 35 | 75 | 65 | 71 | **2,5** | M64x2 | 10 | 3300 | 0,2 |
| Elster/ABB MO-C/EAS-N | MOC | 35 | 75 | 65 | 71 | **2,5** | M65x2 | 10 | 3500 | 0,2 |
| Elster/ABB MO-E/EAS-H | MOE | 35 | 75 | 65 | 71 | **2,5** | M65x2 | 10 | 3600 | 0,2 |
| SPX/Spanner Pollux Pollomuk | MUK | 35 | 75 | 65 | 71 | **2,5** | G 2 ¼" | 10 | 3600 | 0,3 |
| WEHRLE Unterputz | WE1 | 60 | 75 | 65 | 71 | **2,5** | M78x1,5 | 10 | 3600 | 0,5 |
| Wasser-Geräte WGU | WGU | 52 | 75 | 65 | 71 | **2,5** | M66x1,25 | 10 | 3700 | 0,4 |
| Techem UP TE1 | TE1 | 65 | 75 | 65 | 71 | **2,5** | M62x2 | 10 | 3400 | 0,1 |

* Additional lengths available on request ** Typical values in horizontal installation position

The meter does not require any upstream or downstream straight length (U0/D0).

### Typical error curve $Q_3$ 2,5 R80H

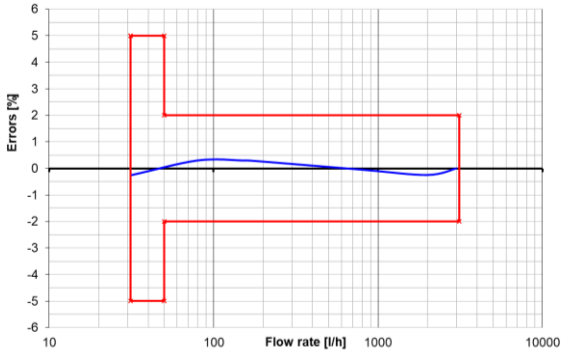


### Typical pressure loss graph

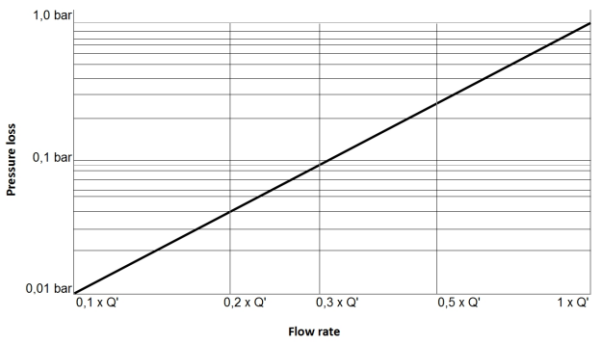




E. Wehrle GmbH | Obertalstraße 8 | 78120 Furtwangen | Germany | info@wehrle.de | www.wehrle.de

# Multi-Jet Dry Meter Measuring Capsules MODULARIS

## MTK-OZX, MTW-OZX

### APPROVALS / CERTIFICATES / STANDARDS

- EU-Type Examination Certificate according to 2014/32/EU (MID)
- OIML R49
- EN 14154
- KTW / W270 (D)
- ACS (F)

Example: Model IST

### ADDITIONAL OPTIONS

- Individual labelling of totalizer and/or protection cover (on customer request)
- Transparent cover with viewing window for litre pointer → Fig. ①
- Individual customer serial number (max. 14 figures)
- Different accessories (e.g. rosettes → Fig. ②)

Fig. ①

Fig. ② (Model IST)

### VARIANTS

Fig. MTW-OZX IST (warm water)

Data sheet MT-OZX, 2021-01-08-1/MEV - Technical changes reserved



E. Wehrle GmbH | Obertalstraße 8 | 78120 Furtwangen | Germany | info@wehrle.de | www.wehrle.de