Piston Meter Cartridge Version WECOUNT

RTK-HPM, RTK-SPM, RTK-OPM

The Electronic Piston Meter Cartridge Version of the WECOUNT product family is the latest generation of meters for municipal use as domestic water meters with LCD display, integrated OMS radio and an incomparably high measurement quality. The cartridge fits in all standardized cartridge housings and enables you to use smart meters in the most easy and cost efficient way possible.

- Integrated radio, flexibly programmable (Walk-by/Drive-by)
- For direct integration into OMS compliant readout systems (T1-Mode, C1-Mode)
- Longterm data logging (storage of 1 due date value, 15 monthly values and 480 daily values)
- Battery life up to 16 years
- Backflow and manipulation detection as well as notifications for leakage and pipe burst
- Inductive device interface for parameterization
- Starting flow rate 2 l/h
- Length 105 mm and 190 mm
- Nominal flow Q_3 2,5 in m^3/h up to Q_3 4 in m^3/h
- MID measurement accuracy class (Q_3/Q_1) up to R500 horizontal und R250 vertical (Standard R160H/V)
- Protection code IP68 (4 weeks 1 m under water)

Piston Meter Cartridge Version WECOUNT

RTK-HPM, RTK-SPM, RTK-OPM

REMOTE READING OPTIONS

Radio according to EN13757-4, wMBus/OMS
(Open Metering System) Generation 4,
Frequency 868 MHz, T1- or C1-Mode,
Security Profile A or B,
128-Bit AES encryption mode 5 or 7,
Radio power 14dBm

Radio parameters individually adjustable via inductive communication head and the free app “µline config“ from the Microsoft online store

AMR – (Automatic Meter Reading)

Gateway, Repeater and web portal available for providing data

Walk-by / Drive-by

Recording and storage of consumption data inside the radio module

Reading out of stored data via mobile radio device and own radio readout app „M-Fair Connect mobile“

The WECOUNT product family

Intelligent residential and domestic water meters based on the same state-of-the-art electronic totalizer which can be programmed according to customer specifications. Standard for all meters:

- Integrated radio
- Easy to read digital LCD display with clear and informative presentation
- Operable with the same soft- and hardware components
- Data logger for 480 daily values, 15 monthly values, notifications for leakage and other incidents
- Common battery concept
  (up to 7 ,13 or 16 years battery life)

E. Wehrle GmbH | Obertalstraße 8 | D-78120 Furtwangen | info@wehrle.de | www.wehrle.de

Piston Meter Cartridge Version WECOUNT

RTK-HPM, RTK-SPM, RTK-OPM

TECHNICAL DATA

Model

RTK-... = Cold water from 0,1 °C up to 30 °C

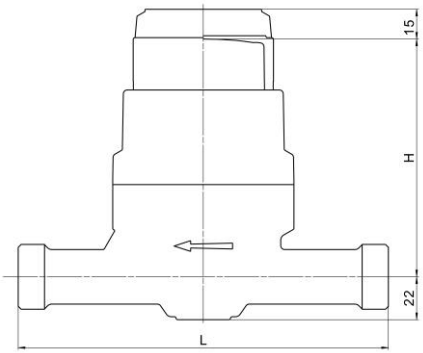

RTK-HPM

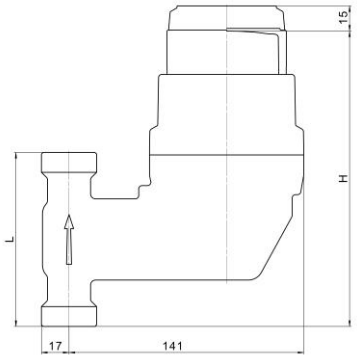

RTK-SPM

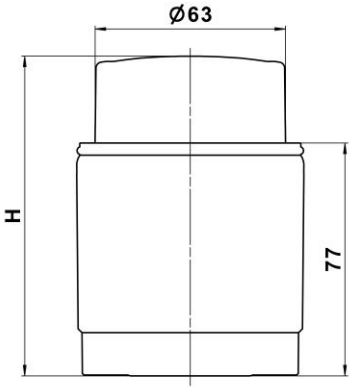

RTK-OPM

Installation position	Model	Length L in mm	Height H in mm (ca.)	Nominal flow Q3 in m^3/h	Nominal width DN in mm	Thread in inch	Starting flow* in l/h	Flow rate Q‘ at 1 bar pressure loss in l/h (ca.)	Weight in kg (ca.)
horizontal	RTK-HPM	190	123	**2,5**	20	G 1 B	2	5000	1,8
horizontal	RTK-HPM	190	123	**4**		G 1 B			1,8
ascending	RTK-SPM	105	179	**2,5**		G 1 B			2,1
ascending	RTK-SPM	105	179	**4**		G 1 B			2,1
cartridge	RTK-OPM	-	106	**4**		-			-

* Typical values in horizontal installation position

The meter does not require any upstream or downstream straight length (U0/D0).

Piston Meter Cartridge Version WECOUNT RTK-OPM (conformity declared) for assembly into standard cartridge bodies can be ordered separately. Technical data as described above.

Typical error curve Q_3 4 R160H

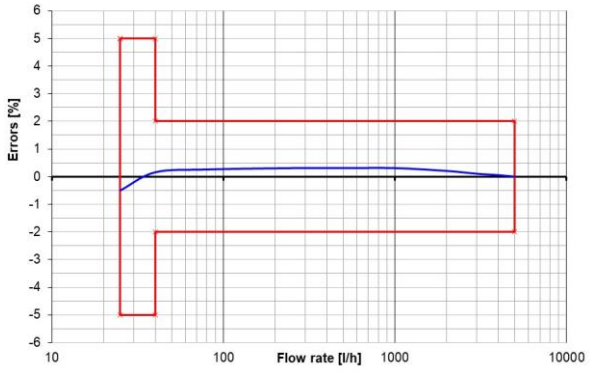

Typical pressure loss graph

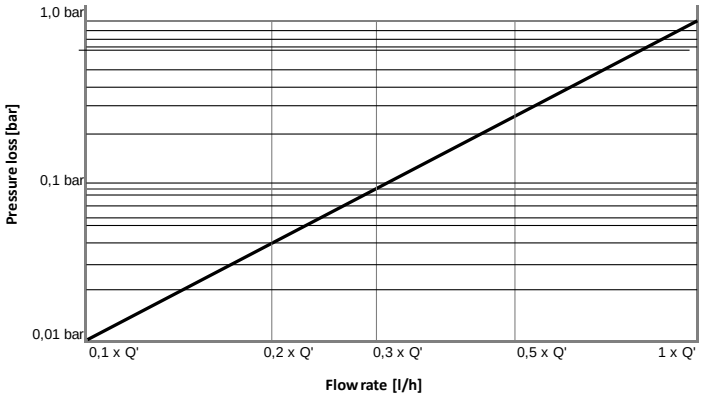

E. Wehrle GmbH | Obertalstraße 8 | D-78120 Furtwangen | info@wehrle.de | www.wehrle.de

Piston Meter Cartridge Version WECOUNT

RTK-HPM, RTK-SPM, RTK-OPM

APPROVALS / CERTIFICATES / STANDARDS

- EU-Type Examination Certificate according to 2014/32/EU (MID)
- EU-Type Examination Certificate according to 2014/53/EU (RED)
- EU-Type Examination Certificate according to 2011/65/EU (RoHS)
- OIML R49
- EN 14154
- KTW-BWGL / W270 (D)
- OMS compliance

ADDITIONAL OPTIONS

- Individual labelling of totalizer and/or protection cover (on customer request)
- Protection cover for RTK-OPM optional
- Non-return valve for RTK-OPM optional

VARIANTS

Fig. RTK-SPM (ascending) with protection cover

Fig. RTK-OPM (cartridge)

Data sheet RTK-HPM, 2022-10-14/MEV – Technical changes reserved

E. Wehrle GmbH | Obertalstraße 8 | D-78120 Furtwangen | info@wehrle.de | www.wehrle.de